Operación de micros e interfases

Conalep San José Iturbide

Proteus 18

Binario	Decimal
1101	
1010	
1100	
1111	
0011	
1000	
0101	
1001	
0001	

Proteus 19

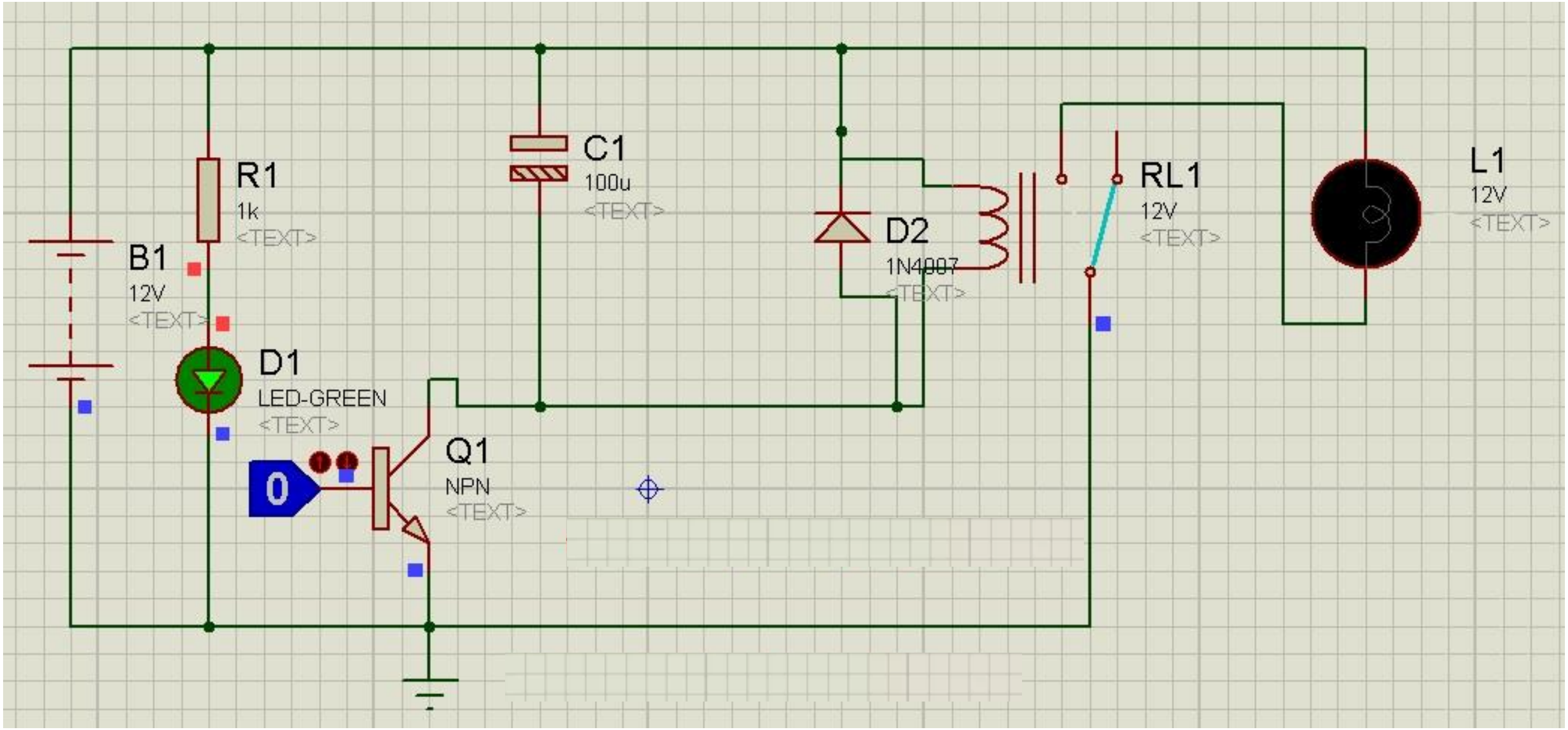
R1
1k
<TEXT>
C1
100u
<TEXT>
B1
12V
<TEXT>
D1
LED-GREEN
<TEXT>
Q1
NPN
<TEXT>
0
D2
1N4007
<TEXT>
RL1
12V
<TEXT>
L1
12V
<TEXT>

Proteus 20

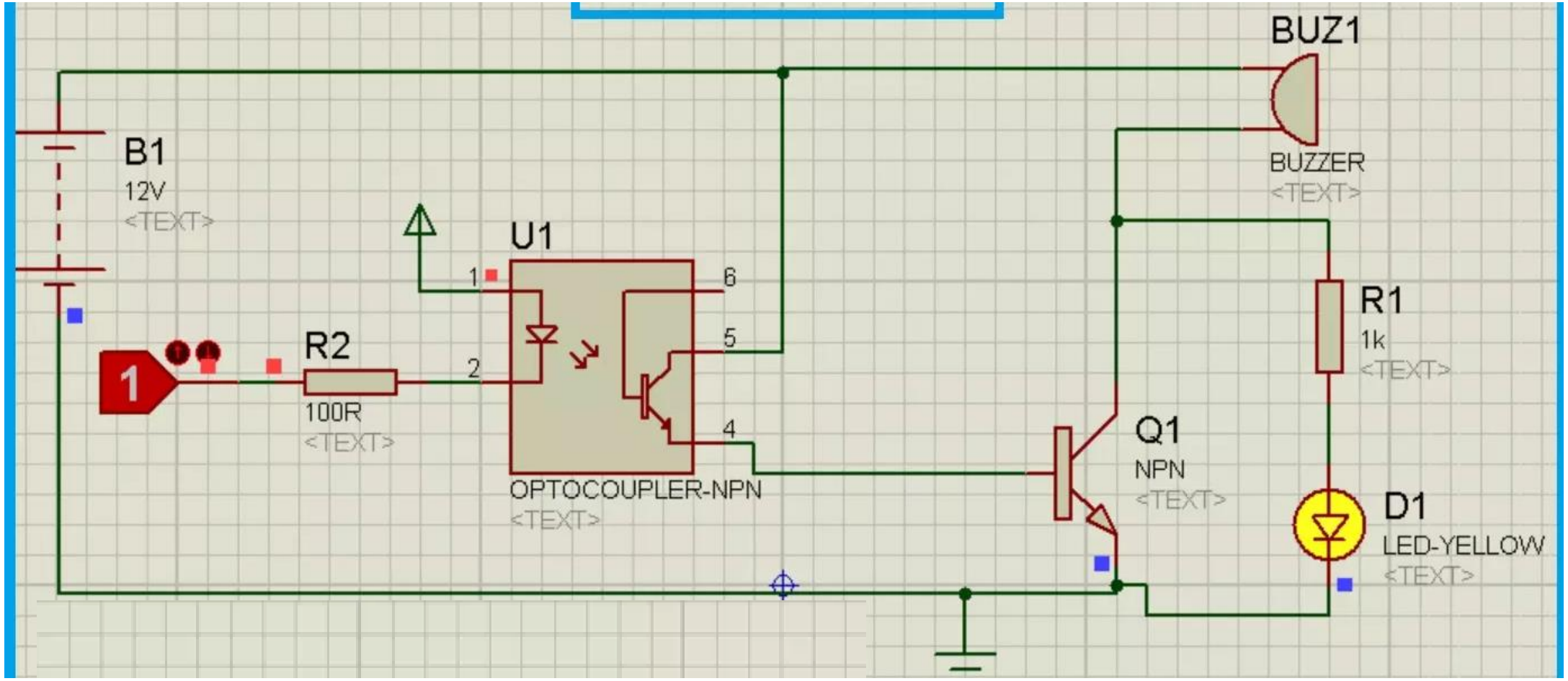
BUZ1
BUZZER
<TEXT>
B1
12V
<TEXT>
U1
1
2
6
5
4
R2
100R
<TEXT>
OPTOCOUPLER-NPN
<TEXT>
R1
1k
<TEXT>
Q1
NPN
<TEXT>
D1
LED-YELLOW
<TEXT>

Proteus 21

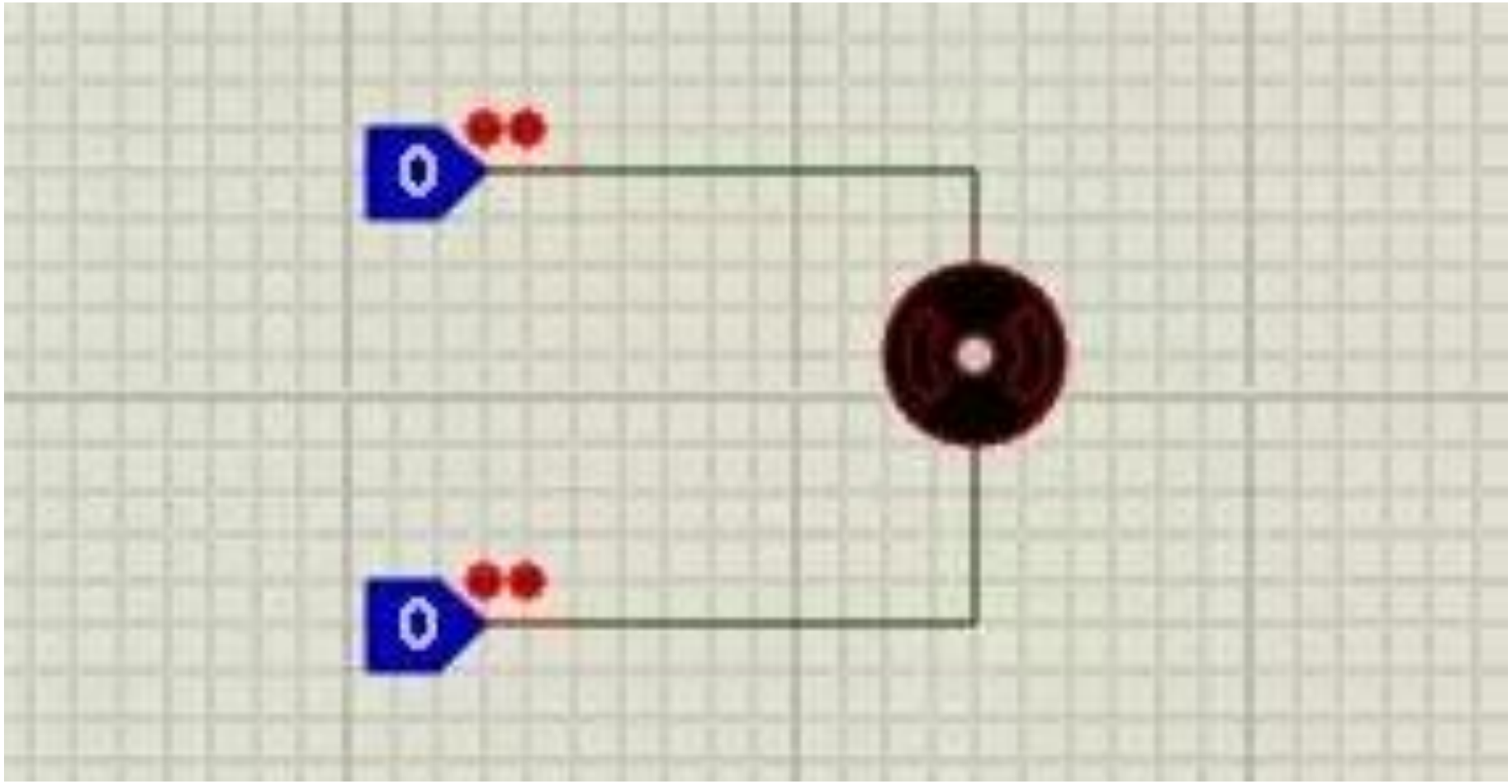

Proteus 22

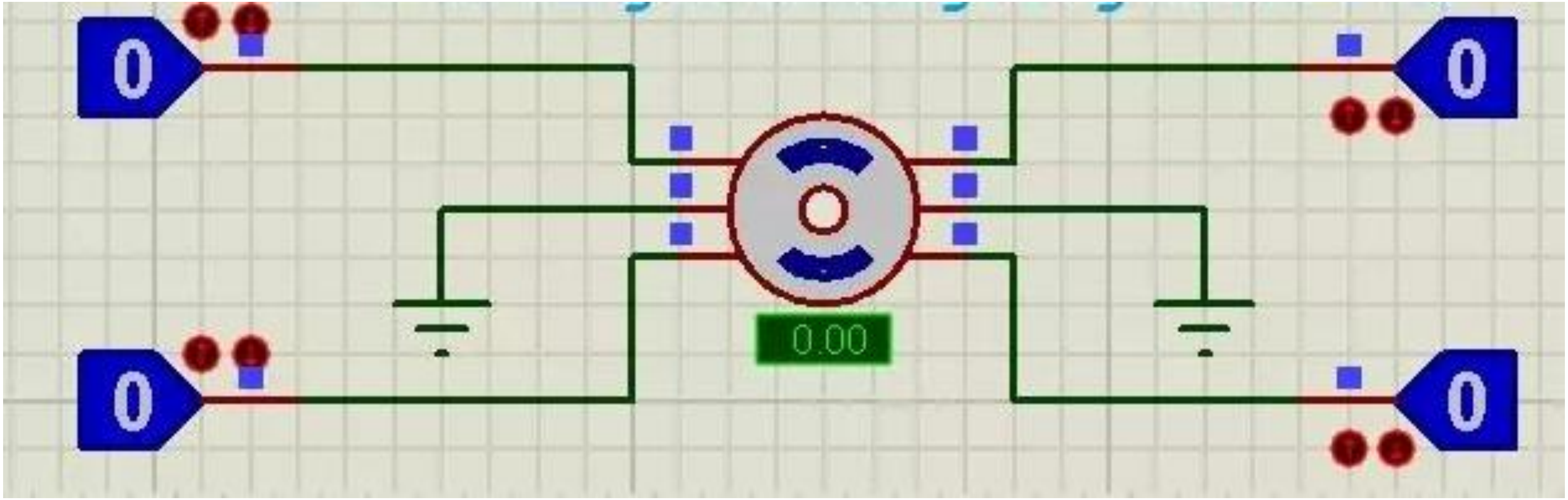

Proteus 23

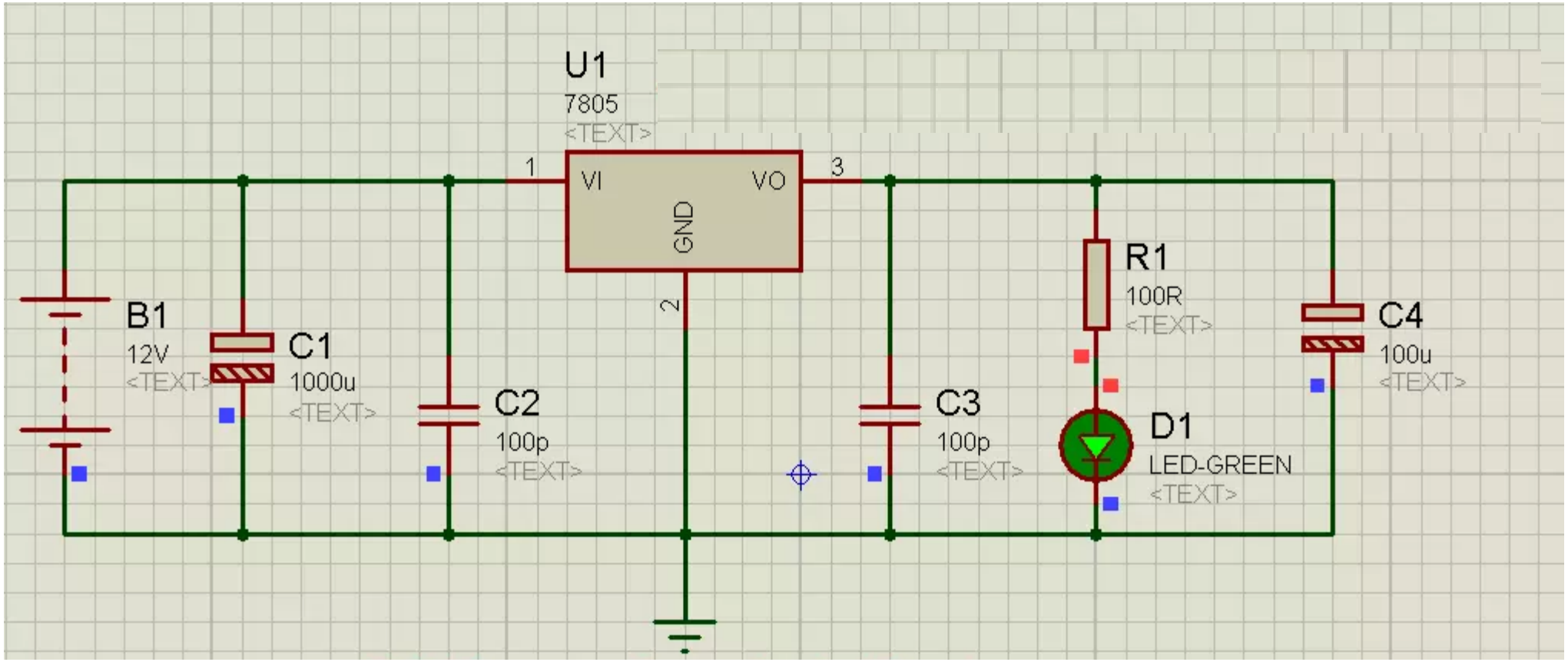
U1
7805
<TEXT>
1
VI
VO
3
GND
2
B1
12V
<TEXT>
C1
1000u
<TEXT>
C2
100p
<TEXT>
C3
100p
<TEXT>
R1
100R
<TEXT>
D1
LED-GREEN
<TEXT>
C4
100u
<TEXT>

Proteus 24

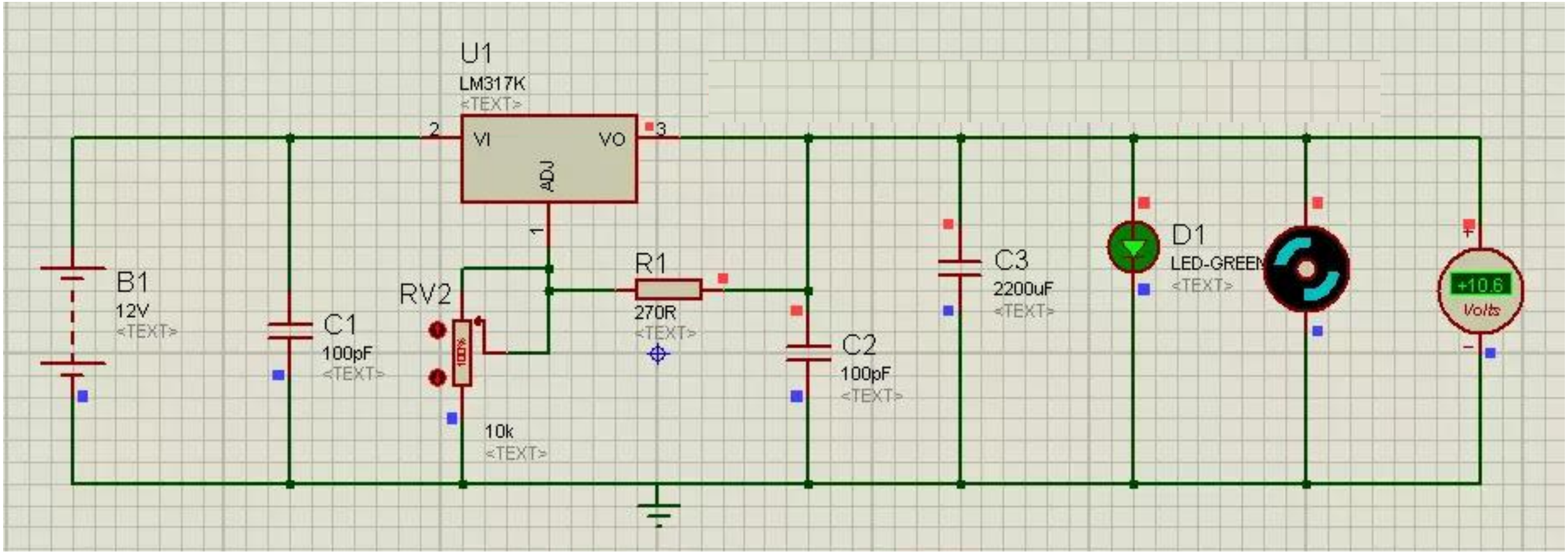
U1
LM317K
<TEXT>
2
VI
VO
3
ADJ
1
B1
12V
<TEXT>
C1
100pF
<TEXT>
RV2
10k
<TEXT>
R1
270R
<TEXT>
C2
100pF
<TEXT>
C3
2200uF
<TEXT>
D1
LED-GREEN
<TEXT>
+10.6
Volts

Proteus 25

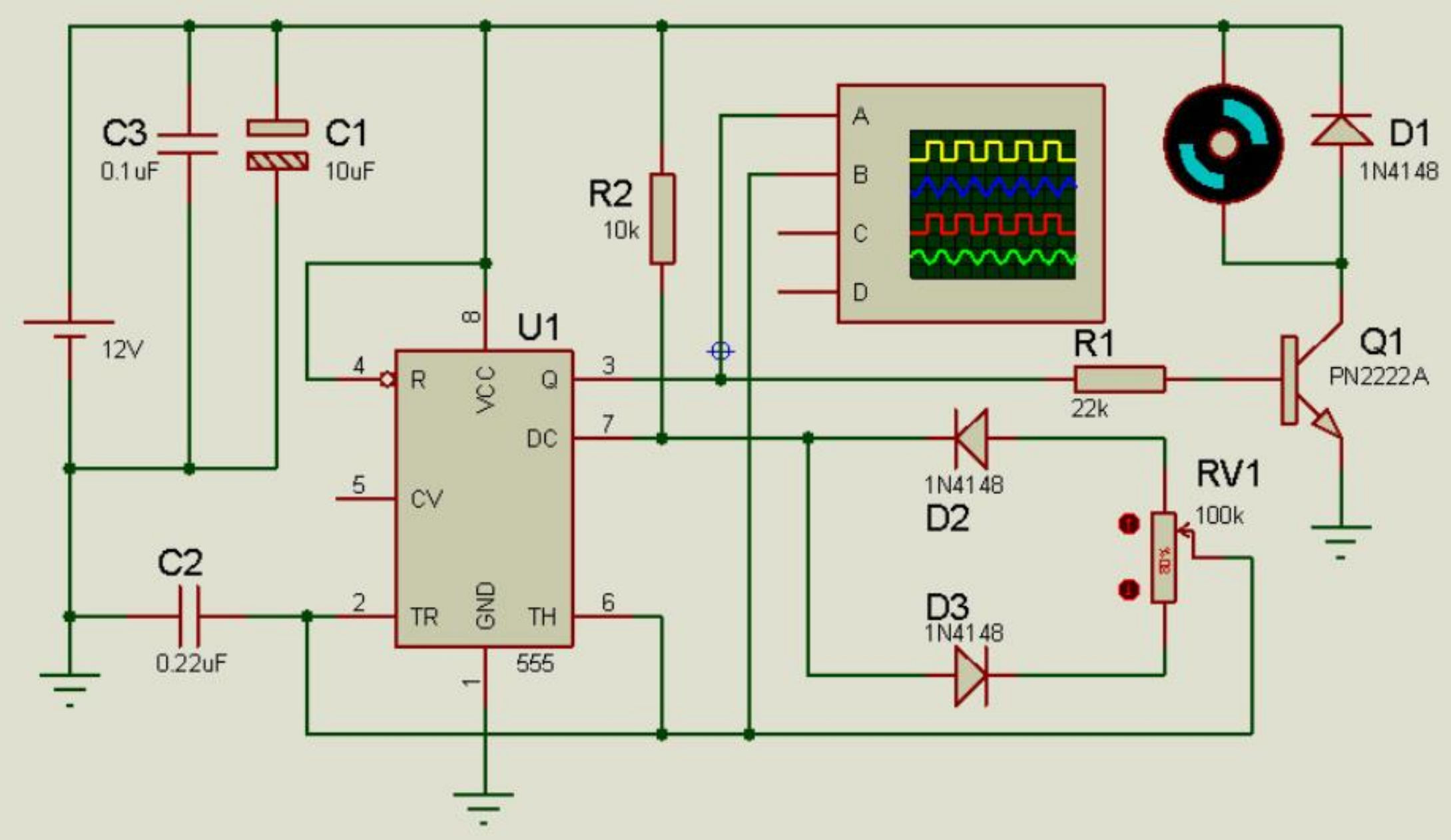
C3
0.1uF
C1
10uF
12V
R2
10k
U1
8
4
R
VCC
Q
3
DC
7
5
CV
2
TR
GND
TH
6
1
555
C2
0.22uF
A
B
C
D
R1
22k
D1
1N4148
Q1
PN2222A
1N4148
D2
D3
1N4148
RV1
100k
50%